MANUAL FOR

CARETTA BUGGY CT

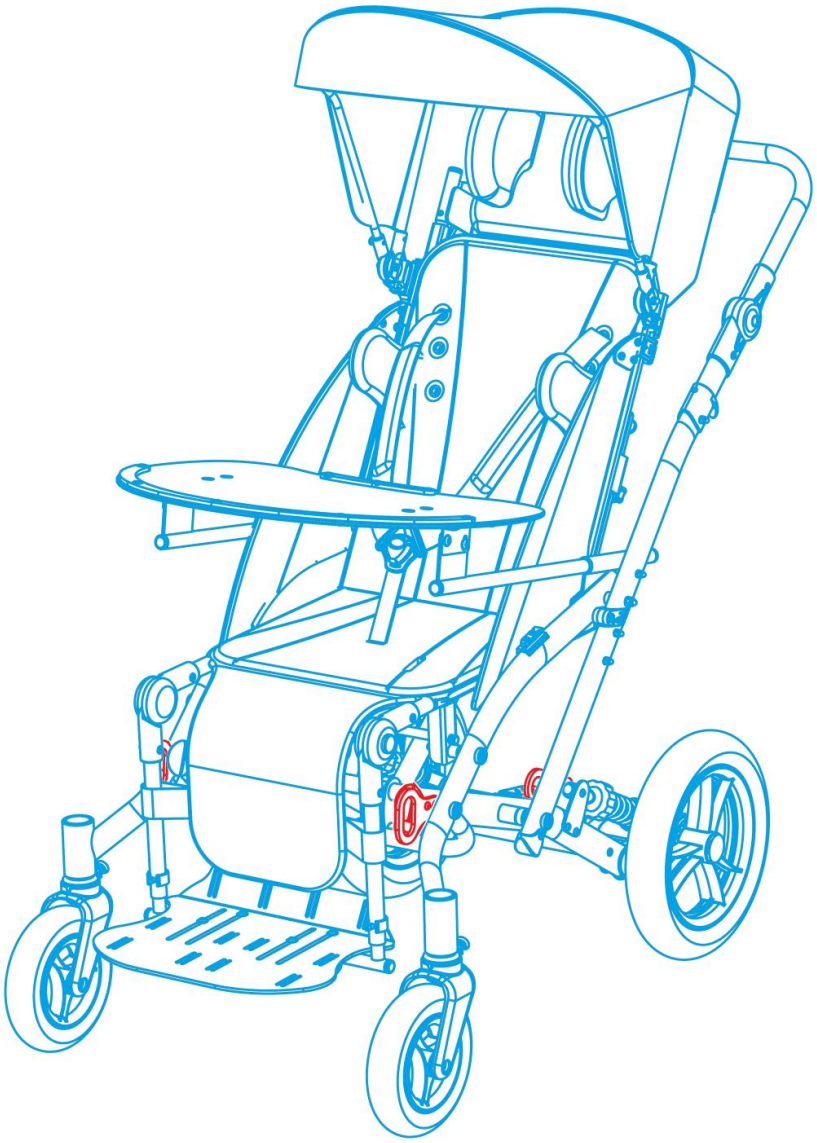

Size: 1

Edition 1 – 2017-09-08

NOTE! THE MANUFACTURER IS SOLELY RESPONSIBLE ONLY FOR THE EQUIPMENT PURCHASED FROM A DIRECT REPRESENTATIVE OF LIW CARE TECHNOLOGY, OR IN SPECIALIZED MEDICAL SHOPS REPRESENTING LIW CARE TECHNOLOGY IN POLAND.

Table of content:

1. Introduction ... 3
2. General safety standards ... 4
3. Indications for product use ... 5
4. Weight and dimensions ... 6
5. Structure of the Caretta Buggy CT ... 9
6. Detailed assembly steps of the Caretta Buggy CT ... 11
7. Installation of additional adapters ... 13
8. Chest supports installation ... 15
9. Roll bar installation ... 15
10. Canopy installation ... 16
11. Table Installation ... 16
12. Folding the stroller ... 17
13. Removing the wheels ... 20
13.1 Removing the front wheels ... 20
13.2 Removing the rear wheels ... 20
14. Moving the Caretta Buggy CT stroller around ... 21
15. Detailed description of adjustment and structure of the Caretta Buggy CT ... 21
15.1 Parking brake ... 21
15.2 Backrest adjustment ... 22
15.3 Pushing handle adjustment ... 22
15.4 Seat depth adjustment ... 23
15.5 Footrest height adjustment ... 24
15.6 Chest supports adjustments adjustment ... 25
15.7 Head supports adjustment ... 26
15.8 Footrest angle adjustment ... 26
15.9 Footrest supports angle adjustment ... 27
15.10 Adjusting the foot-rest platforms ... 27
15.11 Position adjustment of horned headrest ... 28
15.12 Angular adjustments of the table ... 28
16. Patient transportation ... 29
17. Cleaning and maintenance ... 34
18. Warranty/Service ... 35
19. Identification plate ... 35
20. Symbols meaning ... 36
21. Compliance with the safety requirements for medical devices ... 36

WARRANTY CARD ... 37

1. Introduction

Developed and created by LIW Care Technology, first-class Pediatric Pushchair Caretta Buggy CT (hereinafter referred to as the buggy), is designed to transport children up to 55 kg. It is designed to facilitate the daily care of children who need transport, whose diseases enable their self-sufficient movement as well as the correct sitting and standing. Buggy Caretta CT medical device is designed for children with paralysis and triplegia or tetra- plegia; with diplegia, hemiplegia or hemiparesis. We did our best to make this Caretta Buggy CT Pediatric Pushchair really easy to operate, to provide stability, with the ability to adapt to the body shape.

We are aware of the fact that assuming sitting position by a disabled person is a very important element of psychomotor development and the opportunity for comfortable and safe movement in open space has a huge, positive impact on patients and their caregivers alike. That is why, we have Caretta Buggy CT, which was designed to be easy to use and to dismantle. The buggy may be used both indoors and outdoors.

We pay special attention to high quality of our products, that is why we would like you to read these user instructions thoroughly – this will ensure a safe use of this product, it will affect its efficiency and it will allow you to fully exploit the advantages of this Caretta Buggy CT.

Keep these instructions in a safe place, so that they are available if required. These instructions are intended to be read by persons responsible for taking care of disabled children.

2. General safety standards

For LIW Care Technology Sp. z o. o., the most important thing is to protect the patients who use our equipment. For ensuring the safety of Caretta Buggy CT users, the following recommendations should be adopted:

1. Please read the Instructions before the first use. In case any questions or doubts should arise, please contact your dealer or the manufacturer. Contact details are available via our website: www.liwcare.pl
2. Please make sure that all the information, tips and warnings contained in these chapters are fully understood.
3. Never leave your child in the buggy unattended.
4. Improper use of the buggy may endanger human health and it may cause injuries.
5. While using and operating the buggy as well as during its setting and adjusting the mechanisms, you should pay close attention to moving parts which create risk of trapping the body in holes or between the elements. After every single adjustment, you must stabilize its position by carefully tightening screws and ensure that all the components are correctly positioned and locked.
6. If the child is in a buggy, make sure it is properly secured by belts and a vest.
7. The Caretta Buggy CT can be used by one person at a time.
8. It is forbidden to transport the baby in the Caretta Buggy CT while using the public and private transport, ie. bus, tram, trolley bus, train.
9. It is forbidden to transport the baby in the Caretta Buggy CT while driving a car – the seat of the buggy is not a car seat. The child cannot stay in the seat while driving.
10. In the back pack pocket, are the tools necessary to carry out the regulations described in this instructions manual: Hex key nr 4.
11. It is forbidden to drive up and drive the buggy down stairs with both the child and without the child.
12. It is forbidden to carry the stroller with child in it.

In these instructions for LIW Care Technology Sp. z o. o. products, you will find information marked with „NOTE!" symbol. It is used to the draw reader's particular attention to the text. It looks as follows:

NOTE! THE SYMBOL IS USED TO DRAW THE READER'S ATTENTION TO THE TEXT WHICH IS MARKED WITH THIS SYMBOL. FAILURE TO COMPLY WITH THE INSTRUCTIONS MAY ENDANGER THE HEALTH AND SAFETY OF THE USER OR IT MAY DAMAGE THE PRODUCT.

3. Indications for product use

Caretta Buggy CT medical device is designed for children suffering paralysis and triplegia or tetraplegia; from diplegia, hemiplegia or hemiparesis.

It is recommended for children who have been diagnosed with:

- cerebral palsy (paralysis cerebralis infantium),
- muscular dystrophies,
- paralysis,
- spina bifida,
- myelomeningocele,
- spinal injury,
- traumatic brain injury,
- strokes,
- other diseases with paresis, paralysis, locomotor disabilities enabling their self-sufficient movement.

4. Weight and dimensions

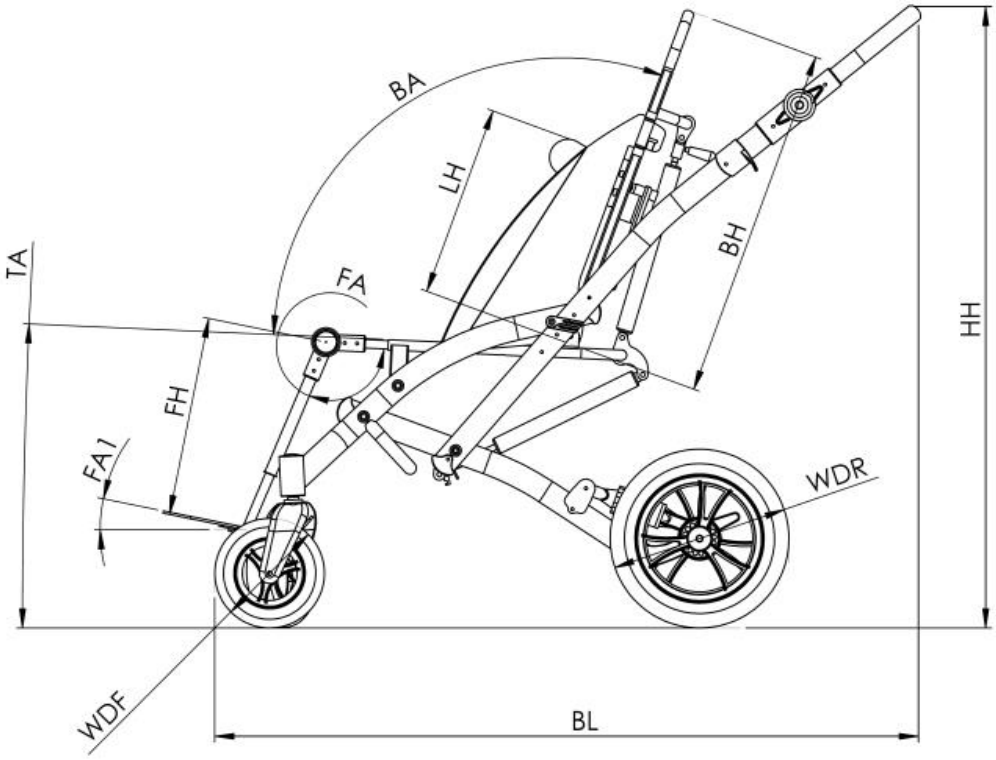

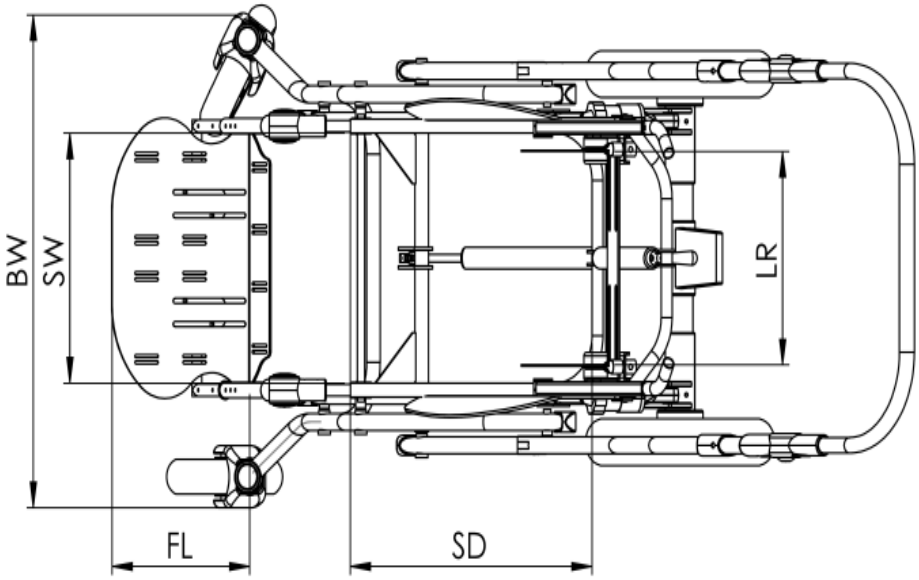

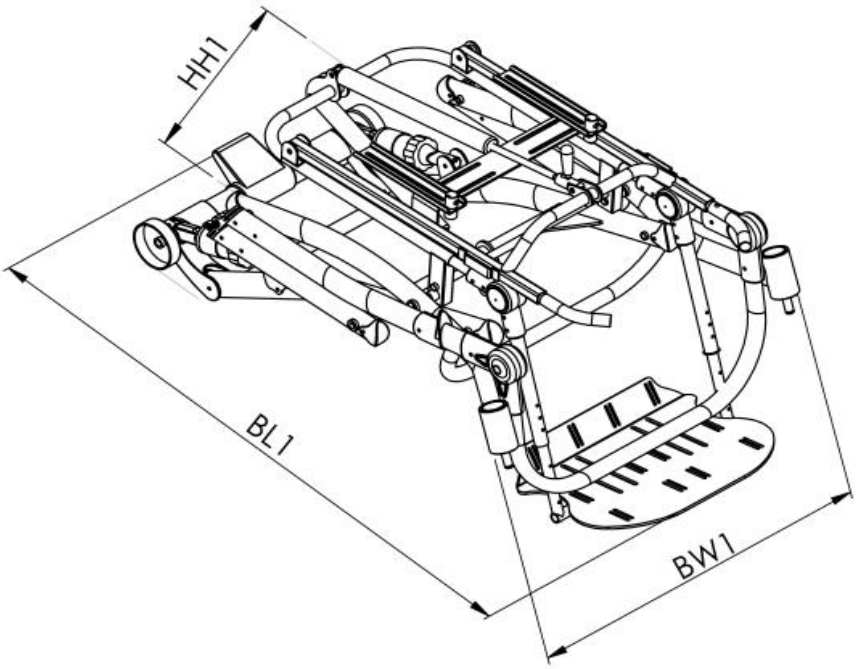
HH1
BL1
BW1

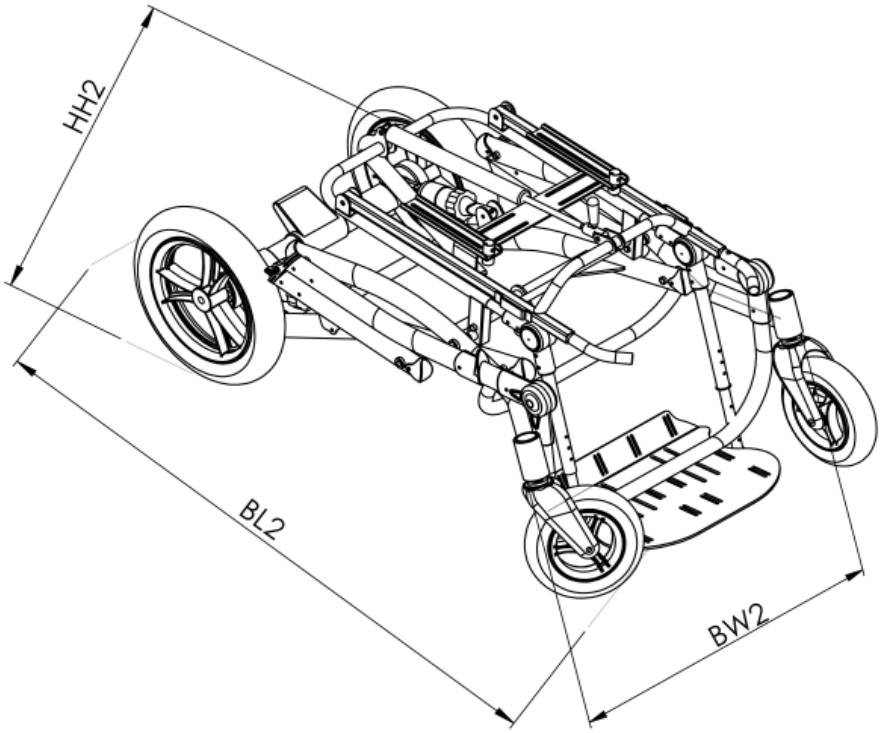
HH2
BL2
BW2

No.	Dimension	Dimension symbol	Dimension [cm]
			Size 1
1	Pelvic support spacing (seat width)	**SW**	32
2	Seat depth	**SD**	36÷42÷48
3	Turning angle	**TA**	-1°÷23°
4	Back height	**BH**	55÷75
5	Back-support angle	**BA**	90°÷120°
6	Chest supports length	**LH**	12÷42
7	Chest supports spacing	**LR**	17÷30
8	Head supports spacing	**HR**	12÷21
9	Footrests height	**FH**	28÷39
10	Footrest length	**FL**	23
11	Footrest angle adjustment	**FA**	0°÷90°
12	Footrest assembly angle	**FA1**	-20°÷20°
13	Base length	**BL**	113
14	Base width	**BW**	64
15	Wheel diameter (front)	**WDF**	19
16	Wheel diameter (rear)	**WDR**	31
17	Handle height	**HH**	70÷113
18	Height of the buggy when folded without wheels	**HH1**	52
19	Width of the buggy when folded without wheels	**BW1**	61
20	Length of the buggy when folded without wheels	**BL1**	94
21	Height of the buggy when folded with wheels	**HH2**	57
22	Width of the buggy when folded with wheels	**BW2**	63
23	Length of the buggy when folded with wheels	**BL2**	97
24	Maximum user's weight		55 kg
25	Weight of the buggy		23 kg

5. Structure of the Caretta Buggy CT

Fig. 1 Structure of the stroller

The stroller consists of[1] :

1. Pushing handle
2. Back rest
3. Seat
4. Stroller frame
5. Front wheels, back wheels
6. Parking brake
7. Rear shock absorbers

[1] The equipment of stroller is available depending on the Continent, Country.

8. Foot rest
9. Five points safety belt
10. Side windshields
11. Bag
12. Adapters along the backrest
13. Protective cover for the handle pipes
14. Transport handles
15. Canopy
16. Sleeping bag
17. Headrest
18. Hip belts
19. Under-arm side supports
20. Protective cover for seat pipes
21. Accessories bag
22. Rain cover
23. Roll bar
24. Table
25. Horned head rest

6. Detailed assembly steps of the Caretta Buggy CT

For the safety reasons, the stroller is delivered in parts, including: frame with a seat, wheels, windshields and back part with, or without the head stabilizer. In order to assemble the stroller, you shall follow the steps below:

STEP 1: Remove any protective film layers from the elements of the buggy, and place the frame as shown on *Fig. 2.*

STEP 2: Install the front wheels by pushing the bolts into the frame holes. Once the bolts are pushed in, a click may be heard when the wheels are properly installed.

Fig. 2 Stroller frame, along with the seat

STEP 3: Install the wheels on the rear axle suspension. Push the wheels until you hear a characteristic click sound.

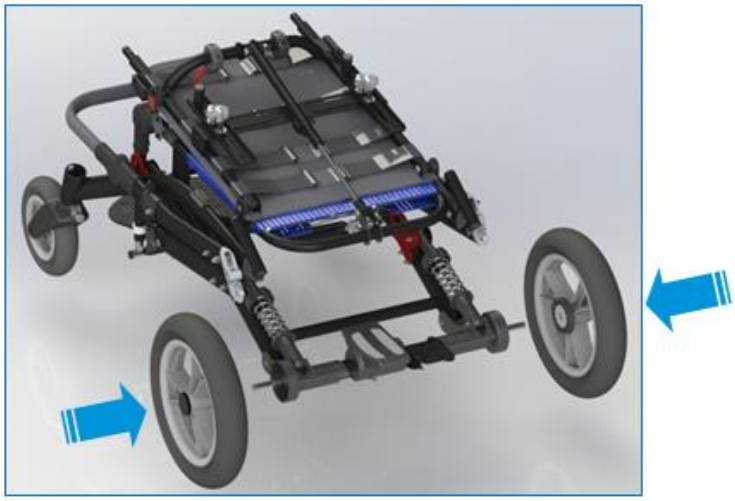

Fig. 3 Stroller frame, along with the wheels

STEP 4: Press the black handle at the back of the frame, and then adjust the back part, so that a proper rest angle is achieved.

Fig. 4 Stroller with the back rest deployed

STEP 5: In order to properly install the windshield, first place the wind shield in socket 1. Then turn the windshield fixing it into the latch 2.

Fig. 5 Mounting the windshield

STEP 6: Pull up the frame's handle until it locks the buggy's frame.

Fig. 6 Unforlding the buggy's frame

7. Installation of additional adapters

Prolonged backrest installation

Press clamp no. 1 and then slide the tubes no. 2 onto the protruding elements of the rest, until you hear a click. After the assembly is completed, slide on the No. 3 material.

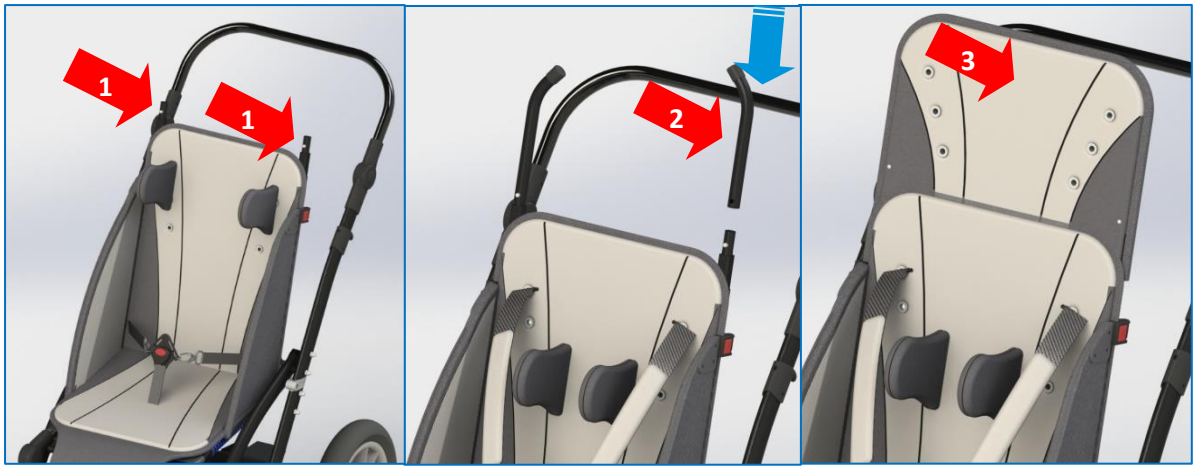

Fig. 7 Mounting the adapters

Head supports (head stabilizers) installation

Press clamp no. 1 and then slide the head support onto the protruding elements of the rest, until you hear a click.

Fig. 8 Mounting the head supports

Horned headrest installation

Press the latch on position 1, slide in the protruding elements from the backside of the horned headrest, until you hear a click.

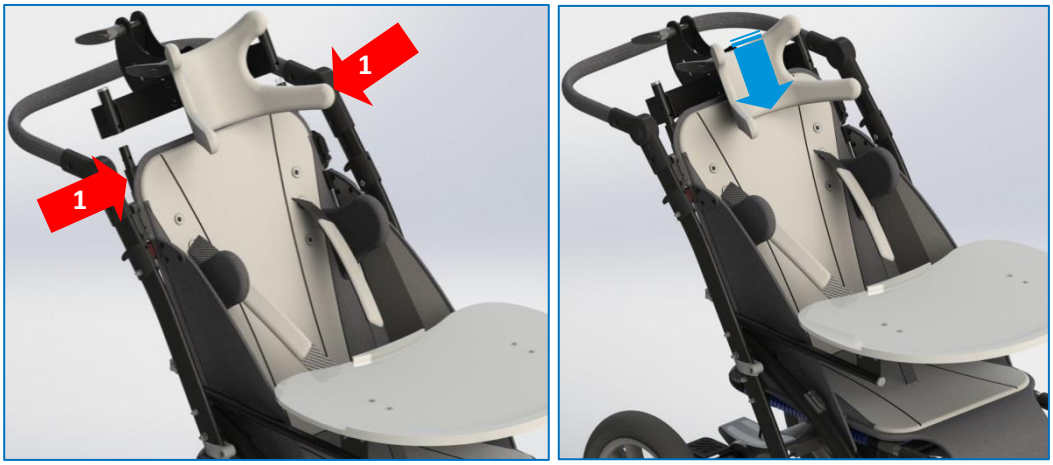

Fig. 9 Mounting the horned headrest

8. Chest supports installation

Press the clamp No. 1 and then insert the chest support into the hole, until it clicks in its place.

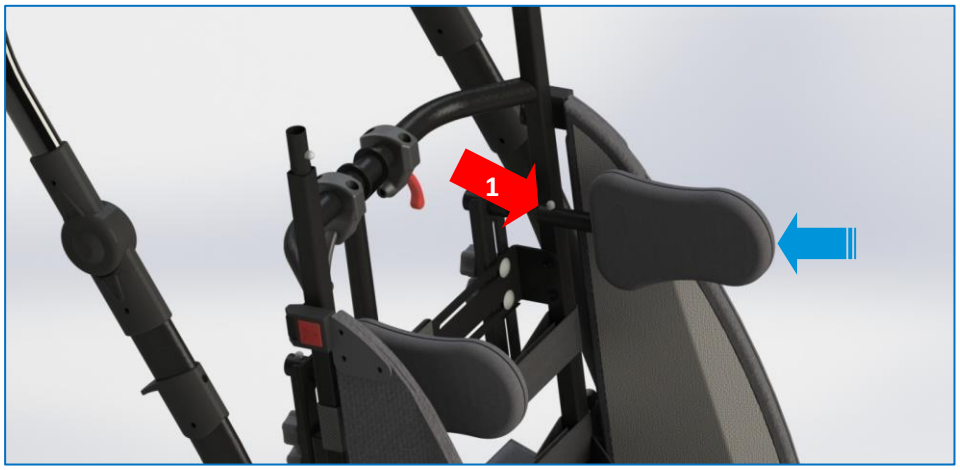

Fig. 10 Chest supports installation

9. Roll bar installation

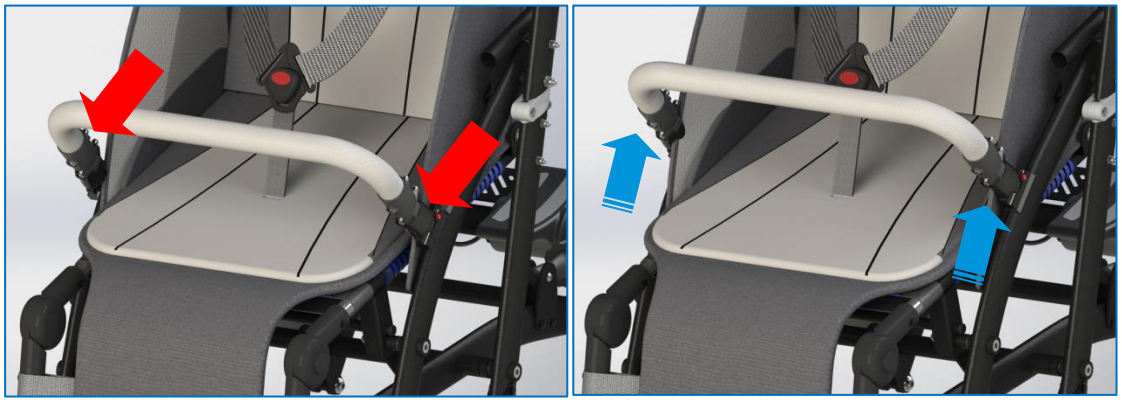

Fig. 11 Roll bar installation

Slide in the roll bar into the mounting frame of the buggy, until you hear a characteristic click sound.

10. Canopy installation

Fig. 12 Canopy installation

Slide the canopy into the plastic mounting sides of the backrest, until you hear a characteristic click sound.

11. Table Installation

In case the table is ordered together with the buggy, installation is as follows:

Pull out the blinding tubes, see (*Fig.13*). Place the table in the grip located between the vestibule and the frame of the buggy. Then fix the table with two knobs legume.

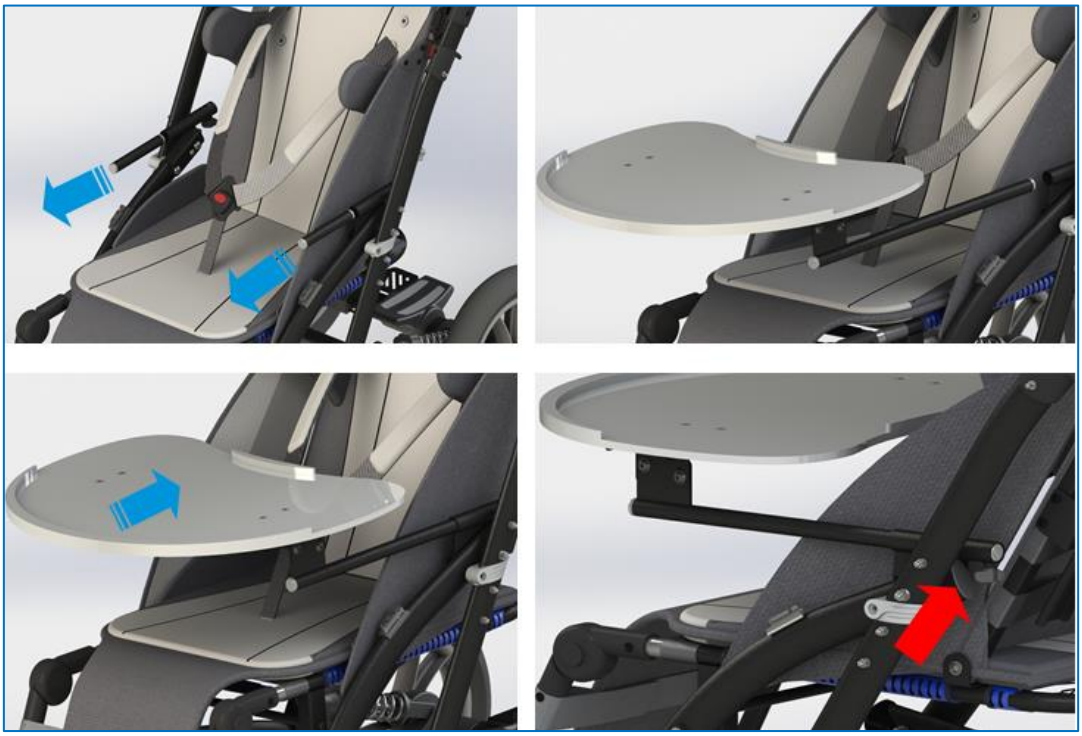

Fig. 13 Table installation

In case you ordered the table before its installation, fix the table using M8 x 16 fastening screws and the 5mm hex key.

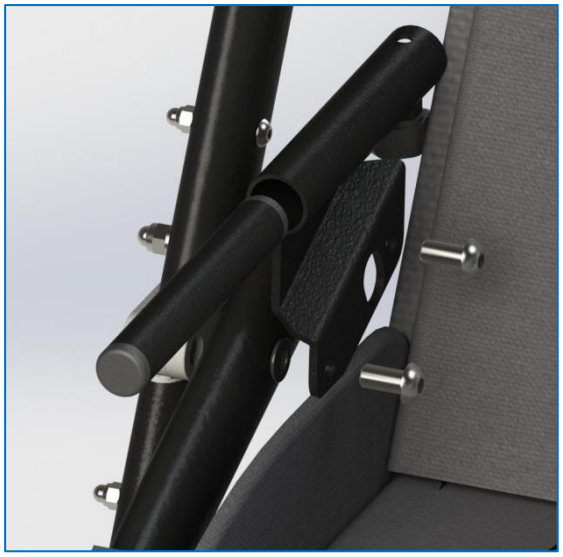

Fig. 14 Mounting of the table

After unfixing the table, once again place back the blinding tubes.

12. Folding the stroller

STEP 1: When removing the canopy, press the red buttons on both sides of the canopy, then pull it out from the frame upwards.

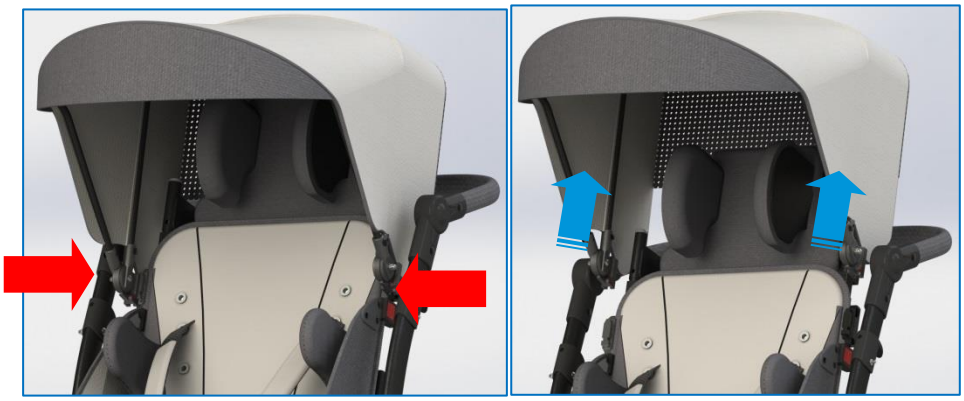

Fig. 15 Canopy dismantling

STEP 2: When removing the roll bar, press the red buttons on both sides of the roll bar, then pull it out from the frame upwards.

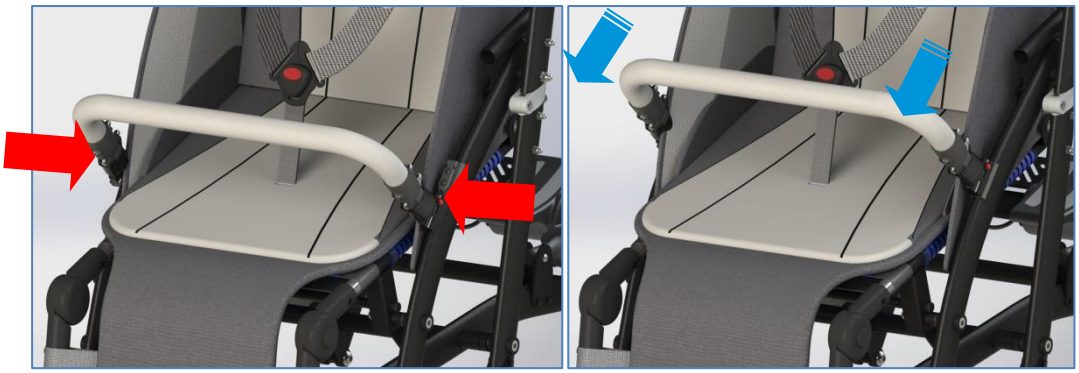

Fig. 16 Roll bar dismantling

STEP 3: Adjust the angle of the seat in a horizontal position by pressing the red lever at the rear of the backrest.

Fig. 17 Adjusting the angle of the seat

STEP 4: Remove the chest supports (chest stabilizers). Press the clamp no. 1 and remove the support from its socket.

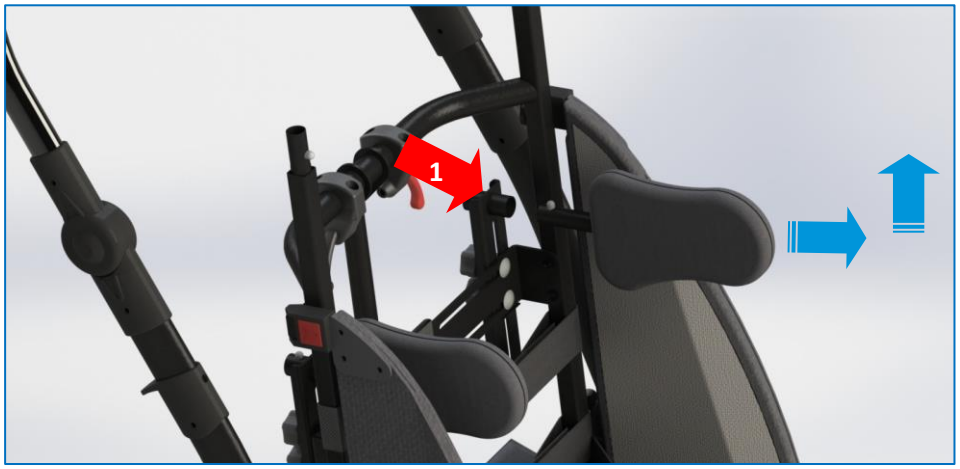

Fig. 18 Chest supports dismantling

STEP 5: Dismantle the windshields. Press the red button on the side of the back rest and remove the windshields.

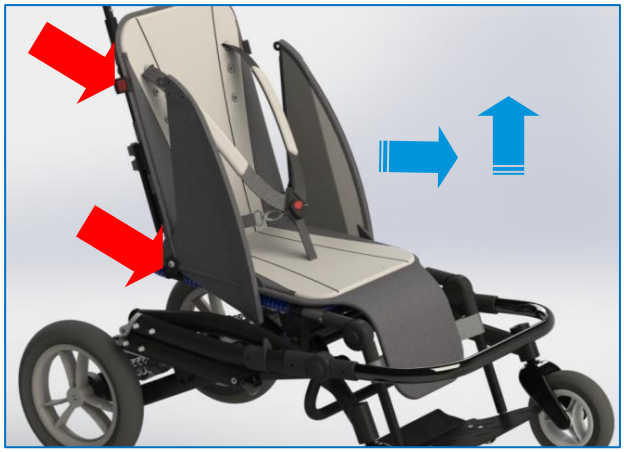

Fig. 19 Windshields dismantling

STEP 6: Pull the release elements and turn the handle to fold the stroller frame.

Fig. 20 Collapsing the framework

STEP 7: Pull the handle used to adjust the back rest angle and lay the backrest forward.

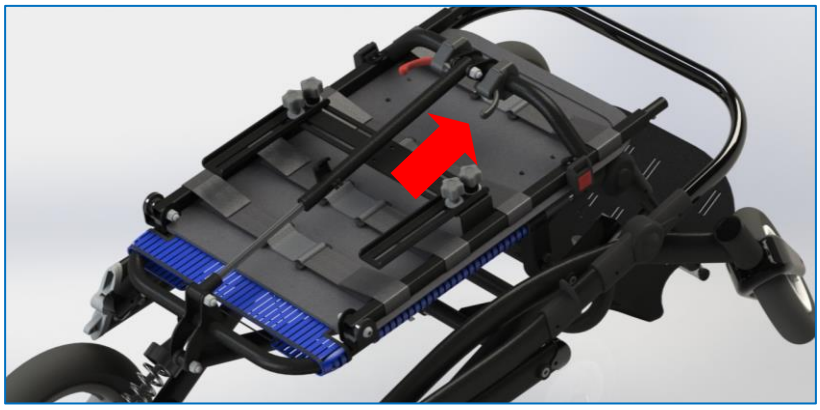

Fig. 21 Collapsing the back rest

13.1 Removing the front wheels

Press the black plastic button from the top and then pull the front wheel to remove it.

Fig. 22 Removing the front wheels

13.2 Removing the rear wheels

Press the metal pin in the rear wheel, then pull to remove it.

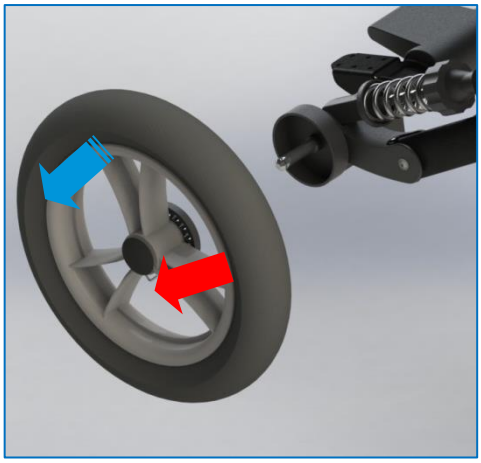

Fig. 23 Removing the back wheels

14. Moving the Caretta Buggy CT stroller around

For safety matters, the stroller should be carried while folded, grabbed by the frame Fig. 24.

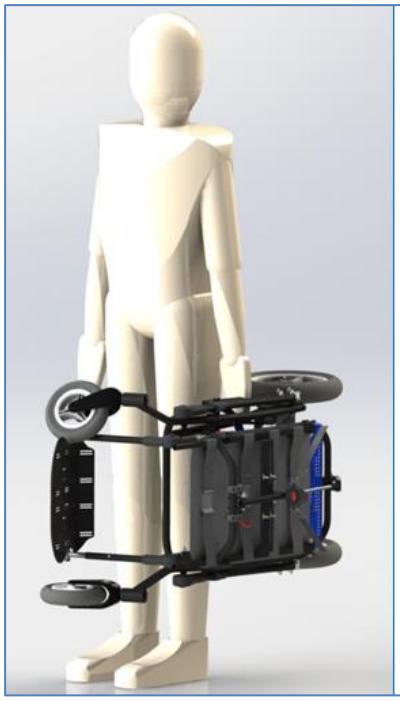

Fig. 24

Fig. 25

NOTE! IT IS FORBIDDEN TO CARRY THE STROLLER WITH CHILD IN IT *FIG 25*.

15. Detailed description of adjustment and structure of the Caretta Buggy CT

NOTE! AFTER EACH ADJUSTMENT, ONE NEEDS TO ENSURE THAT ALL OF THE ADJUSTMENT ELEMENTS ARE PROPERLY PLACED AND SECURED.

15.1 Parking brake

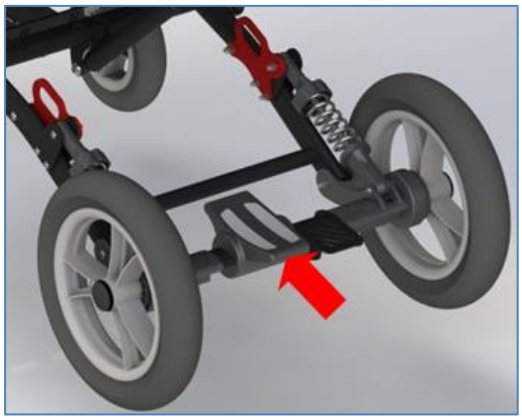

Fig. 26 Parking brake

The back wheels are locked by the lever at the back bar of the framework. By pressing the lever, we block the back wheels. Unlocking is realized by lifting the lever up. *Fig. 26.*

NOTE! THE BRAKE STATUS NEEDS TO BE REGULARLY ASSESSED. DIRT AND MUD NEED TO BE PERIODICALLY CLEANED.

NOTE! BE CAUTIOUS, WHEN GOING OVER A THRESHOLD.

NOTE! STABILITY OF THE STROLLER MAY BE AT RISK IN THE EVENT OF UNEXPECTED PUSH, TILTING OR LEANING ON IT.

15.2 Backrest adjustment

Fig. 27 Adjusting the angle of the back rest.

Press the black lever installed on the back part of the seat, and by manipulating that lever adjust the back rest angle, within the range between 90° ÷ 120° *Fig. 27.*

15.3 Pushing handle adjustment

Fig. 28 Pushing handle

Press both adjustment buttons simultaneously, set a proper height for the handle. Once it is set, move it up and down, until you hear the lock click. *Fig. 28*. There is an option of adjusting the height at which the pushing handle is placed, within the range from 70 to 113 centimeters from the ground.

NOTE! EVERY ITEM PLACED ON THE FRAME HANDLE MAY CAUSE LOSS OF STABILITY OF THE BUGGY.

Fig. 29 Seat angle adjustment

Holding the seat, press the red release lever (*Fig. 28*), simultaneously setting the desired angle of the seat *Fig. 29.*

NOTE! DUE TO THE WIDE SCOPE OF POSSIBLE ADJUSTMENT, WHEN YOU REGULATE THE SEAT ANGLE AND THE BACK REST, THERE IS AN OPTION OF SETTING A POSITION IN WHICH THE CHILD'S HEAD IS BENEATH THE PELVIS LINE. USING SUCH POSITION IS PROHIBITED, SINCE IT MAY LEAD TO CHILD BEING CHOKED.

15.4 Seat depth adjustment

Fig. 30 a)

STEP 1: Press the blockade under the seat.

Fig. 30 b)

STEP 2: Extend the pipe which supports the footrest.

Fig. 30 c)

STEP 3: Install additional belt and install the seat upholstery element.

15.5 Footrest height adjustment

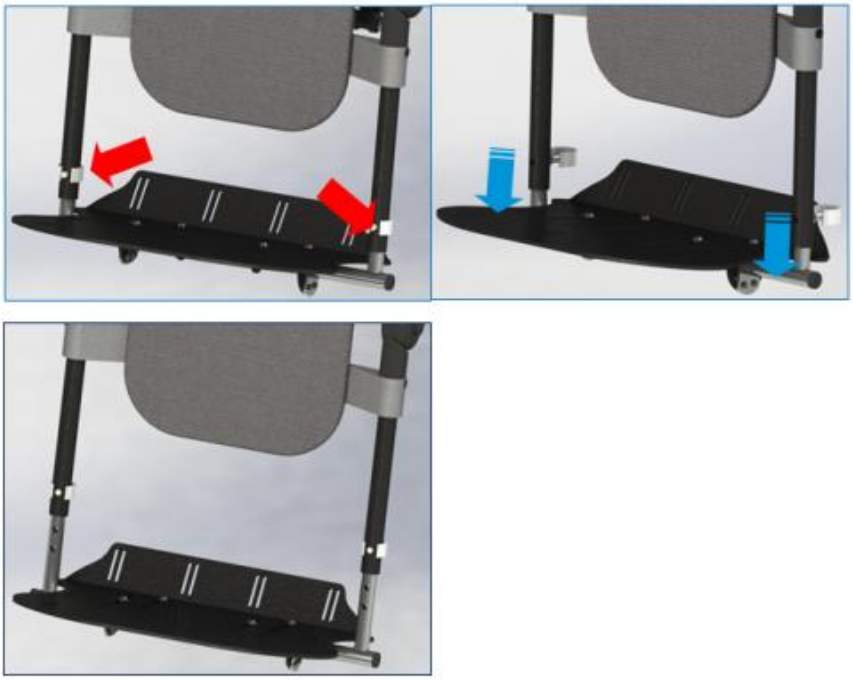

Fig. 31 Footrest height adjustment

Press the locking button and then pull the pipe, setting a proper height for the footrest. After adjusting, remove the latch in order to lock the footrest.

NOTE! THE FOOTREST IS USED TO REST THE FEET ON, THE CHILD SHOULD NOT STAND ON THAT ELEMENT.

15.6 Chest supports adjustments adjustment

Fig. 32 Chest support width and height adjustment

Loosen the knobs and then adjust the height and width of the chest supports. Right and left support may be set asymmetrically.

Fig. 33 Chest support width and height adjustment

Breast pelottes can be rotated upto 180° degrees in order to increase the control range. For this function, unscrew the clamping knobs, turn pelottes and then screw back in the clamping knobs.

15.7 Head supports adjustment

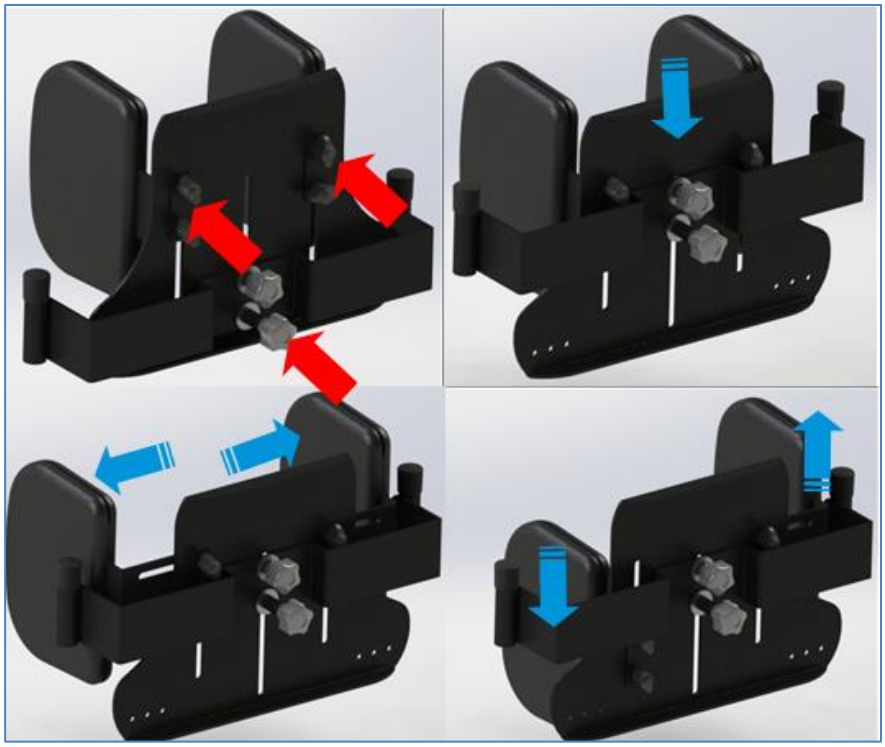

Fig. 34 Head supports width adjustment

Unscrew the 6 rotary knobs. Adjust the height of the headrest and width of head supports. After adjusting, tighten the adjustment knobs. Head supports can be set asymmetrically.

15.8 Footrest angle adjustment

Fig. 35 Footrest angle adjustment

Loosen the lower adjustment screws, set a proper angle, lock these screws again. *Fig. 35.* It is possible to adjust the footrest angle, within the range between -20° ÷ 20°.

15.9 Footrest supports angle adjustment

Fig. 36 Footrest supports angle adjustment

Press both adjustment buttons simultaneously. Once it is set, move it up and down, until you hear the lock click. It is possible to regulate the footrest support angle within the range between: 0 - 90°.

15.10 Adjusting the foot-rest platforms

Fig. 37 Adjusting the foot-rest platforms

Unscrew the four screws that secure the platform. Slide the platform at a suitable distance. After adjustment tighten the screws.

15.11 Position adjustment of horned headrest

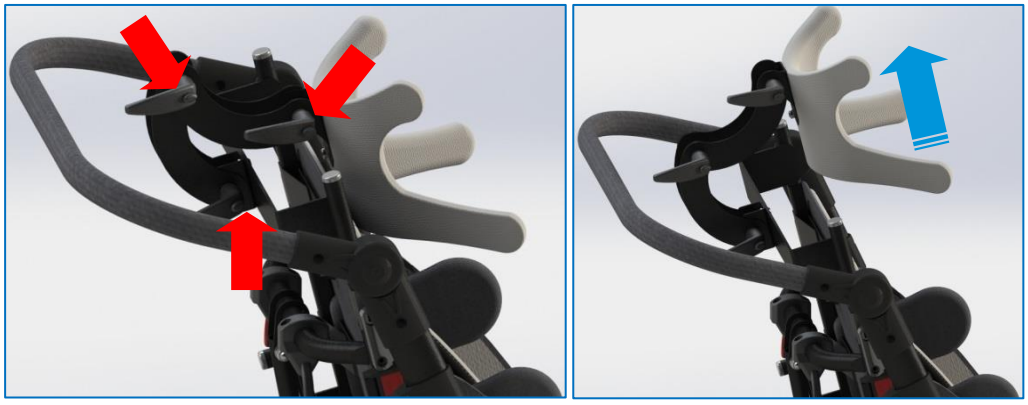

Fig. 38 Position adjustment of horned headrest

To change the position of the headrest, loosen the adjustment knobs adjust the headrest in the desired position, then tighten the adjustment knobs.

15.12 Angular adjustments of the table

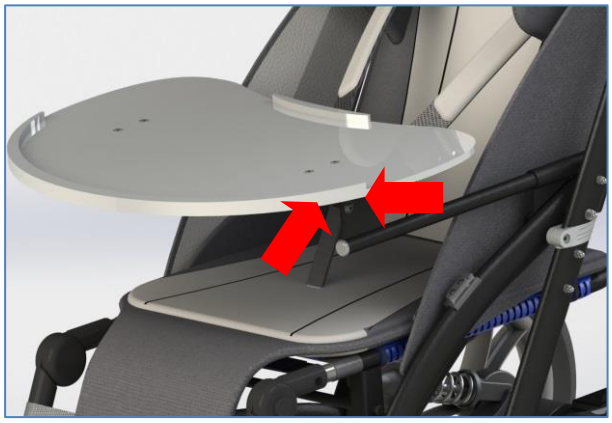

Fig. 39 Angular adjustments of the table

Angular adjustment of the worktop is made by loosening the two screws that are located above the table holders below the worktop. After obtaining the desired angle of inclination, tighten the screws. The adjustment screws are located on both the left and right side of the table.

16. Patient transportation

NOTE! THE STROLLER PASSED THE DYNAMICS TEST IN ACCORDANCE WITH THE ISO 7176-19:2008 STANDARD.

NOTE! THE MAXIMUM WEIGHT OF THE PATIENT TRANSPORTED IN THE CARETTA BUGGY CT STROLLER FIXED IN A CAR IS 43 KG.

NOTE! THE FAILURE TO COMPLY WITH ANY OF THE FOLLOWING MAY RESULT IN DEATH OR SERIOUS INJURY OF THE PASSENGER OF THE STROLLER.

NOTE! THE COMPANY LIW CARE TECHNOLOGY SP. Z O.O. BEARS NO LIABILITY FOR THE BODILY HARM SUSTAINED IN A ROAD ACCIDENT DURING WHICH A PATIENT WAS FASTENED IN A CARETTA BUGGY CT STROLLER.

NOTE! EVEN IF THE STROLLER IS USED CORRECLY DURING THE TRANSPORT OF THE PASSENGER IN A CAR, THE SECURITY SYSTEMS MAY ONLY MINIMIZE THE RISK OF BODILY HARM DURING ROAD ACCIDENTS.

NOTE! THE SECURITY OF THE PASSENGER OF THE STROLLER DEPENDS TO A VERY LARGE EXTENT ON THE PERSON IN CHARGE OF THE TRANSPORT AND FIXING OF THE STROLLER. PARTICULAR ATTENTION NEEDS TO BE PAID TO WHETHER THE PERSON WAS TRAINED IN THE PRINCIPLES AND PROVISIONS REGARDING FIXING STROLLERS IN VEHICLES AHD WHETHER THEY COMPLY WITH SUCH PRINCIPLES.

NOTE! ANY MODIFICATIONS OF THE STROLLER, AND IN PARTICULAR OF ITS TRANSPORT HANDLES, ARE PROHIBITED.

NOTE! A ROAD ACCIDENT INVOLVING THE CARETTA BUGGY CT STROLLER MAY DAMAGE THE STRUCTURE OF THE STROLLER. BEFORE FURTHER USE, THE STROLLER SHOULD BE SUBJECT TO INSPECTION AT THE MANUFACTURER'S SERVICE CENTRE.

NOTE! THE CARETTA BUGGY CT STROLLER INSTALLED IN A VEHICLE ADAPTED TO THE TRANSPORT OF DISABLED PERSONS DOES NOT ENSURE THE SAME LEVEL OF SECURITY AS THE SEATS PERMANENTLY FIXED IN THE VEHICLE. IF THE PATIENT'S CONDITION ALLOWS TO CARRY THEM TO THE CAR SEATS, SUCH SOLUTION IS RECOMMENDED. IF THE PATIENT MUST BE TRANSPORTED ON A STROLLER, THE FOLLOWING PRINCIPLES MUST BE COMPLIED WITH:

a) The car must be adapted to the transport of stroller-bound passengers. The vehicle must be equipped with special fixing points.
b) The appropriate amount of free space around the user of the stroller should be ensured: at least 650 mm in the front and at least 400 mm at the back.
c) The stroller must be installed in a forward-facing position, in accordance with the instructions for the 4-point fixing system provided by the manufacturer of that system. The fixing system must meet the requirements of the standards ISO 10542 or SAE J2249.
d) The four-point belts fixing the stroller to the structure of the vehicle should be clasped as tightly as possible and locked in accordance with the instruction of the manufacturer of the belts.
e) The stroller is suitable for use in vehicles and meets the requirements regarding the performance characteristics for the transport of a forward-facing stroller in a head-on collision. Its use in other configurations in a vehicle has not been tested.

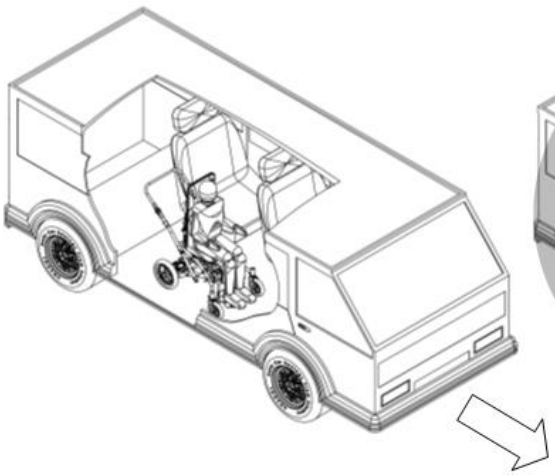

Fig. 40

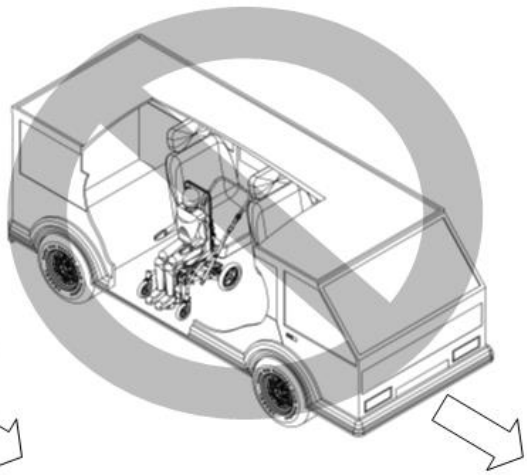

Fig. 41

f) A chest belt and a hip belt should be used in order to reduce the risk of hitting the elements of the vehicle with the head and the chest.
g) The hip belt should be set across the front part of the pelvis so that the angle of the lap belt fits within the preferred 30°-75° zone with regard to the level of *Fig. 42.*
h) If possible, it is recommended that the hip belt be set at the highest possible angle with regard to the floor.

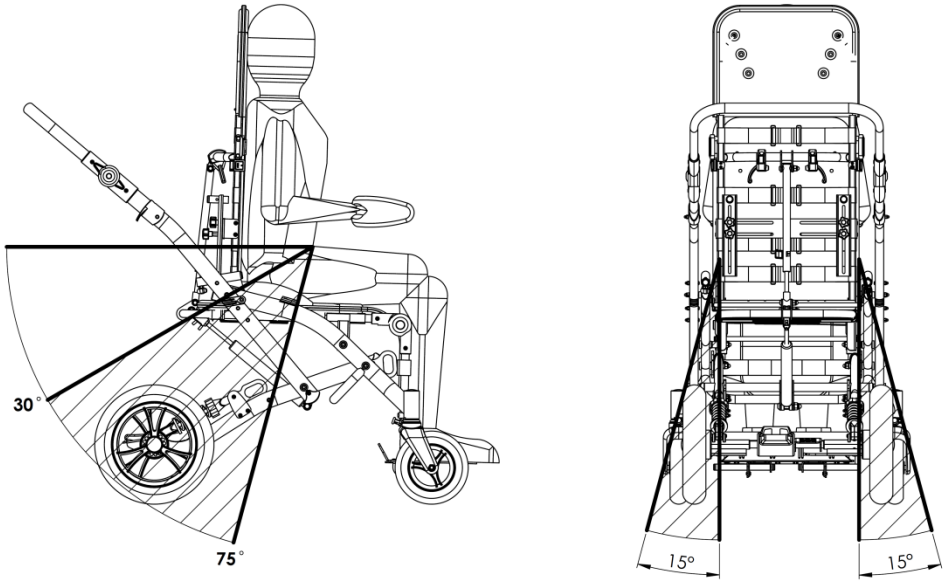
30°
75°
15°
15°

Fig. 42

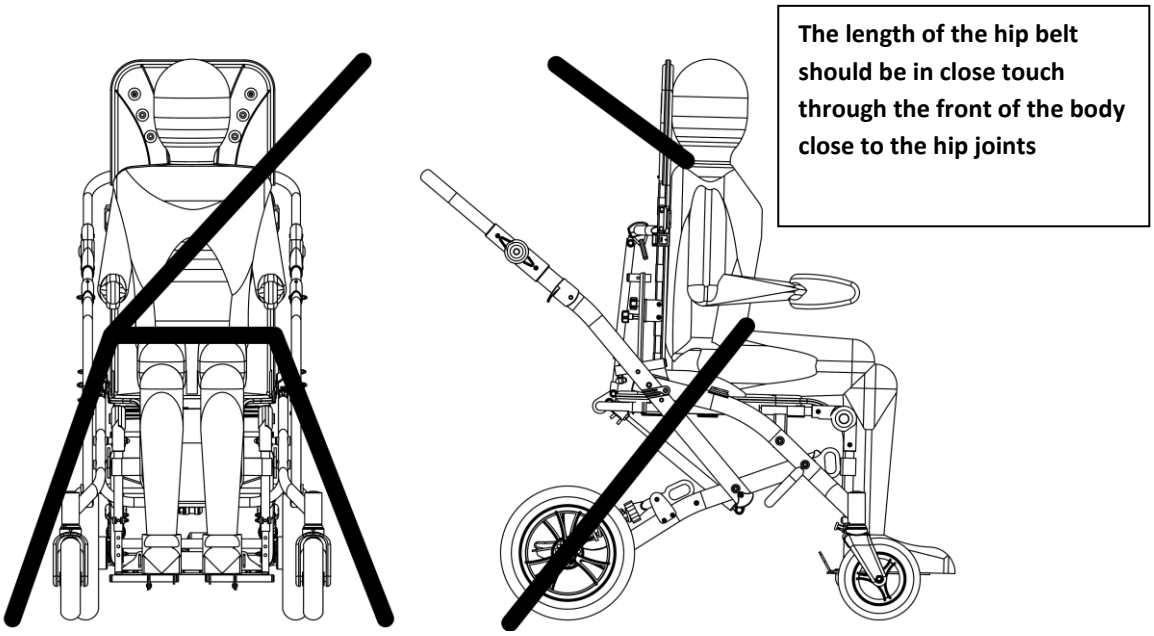
The length of the hip belt should be in close touch through the front of the body close to the hip joints

Fig. 43

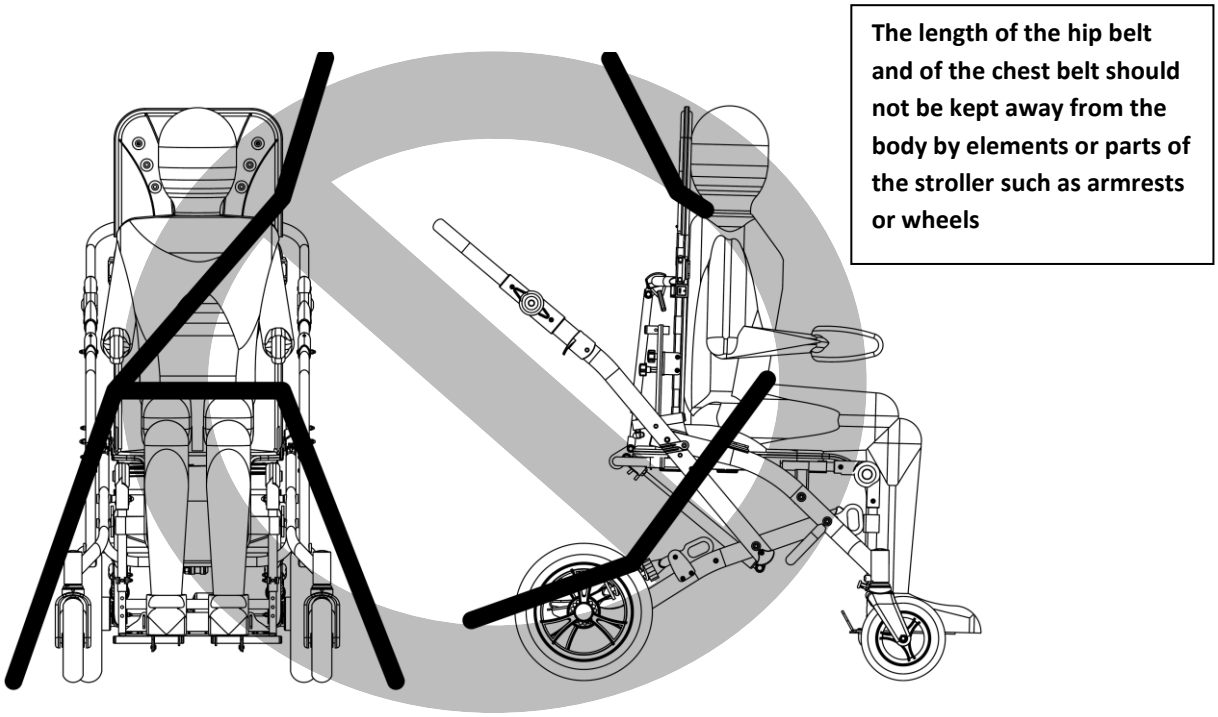

Fig. 44

i) The length of the hip belt and of the chest belt should not be kept away from the body by elements or parts of the stroller such as armrests or wheels *Fig. 44.*

j) The length of the chest belt should run above the arm and across the chest *Fig. 45*.

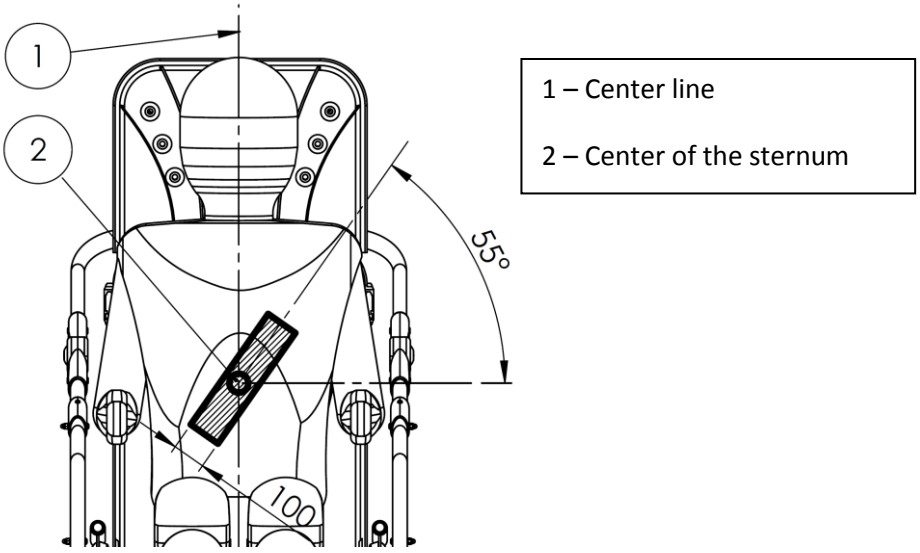

Fig. 45

k) The hip belt and the chest belt should be adjusted as tightly as possible, however, in a manner comfortable for the user.

l) The hip belt and the chest belt should not be twisted while in use.

m) The backrest of the seat should be set in a diagonal position and the tilt of the seat - horizontal position.

n) The stroller should be secured with a parking brake.

o) The seat's strollers should be taken off while fixing it in the vehicle as they make it impossible to fasten the passenger's seatbelts correctly.

p) The stroller's accessories such as: table, legs abduction belts and pelvic belts, canopy, roll bar, under-arm side supports must be dismantled. The accessories should be secured in the vehicle during the drive to prevent their dislocation and causing harm to the users of the car in case of a collision.

q) The five-point stabilizing harness included with the stroller should be fastened.

NOTE! THE BELTS INSTALLED IN THE STROLLER DO NOT SECURE THE PATIENT DURING A ROAD ACCIDENT. THE FIVE-POINT HARNESS OF THE STROLLER IS ONLY FASTENED TO STABILIZE THE PATIENT IN THE STROLLER.

r) The fixing points for the stroller are located as follows *Fig. 46*.

Fig. 46

s) The fixing points are additionally marked with the label:

Fig. 47

t) The stroller should not be fixed to additional elements or accessories, e.g. spoke, foot rest, pushing handle etc.

17. Cleaning and maintenance

Caretta Buggy CT Stroller is a mechanical device, with its frame made out of steel and aluminium. The frame is powder-coated. Foam - sponge inserts are attached to the metal structure of the device. The foam elements are covered with textile material covers. None of the Buggy's external layers cause skin irritation. Caretta Buggy CT stroller, as any other medical device, shall be kept clean and shall be used in line with the manufacturer's guidelines.

- The paint coating and plastic covers should be cleaned with a damp cloth. It is permissible to use mild detergents. Dust removal shall be carried out mechanically, or with the use of a soft brush.
- The cover should be washed by hand, or in a washing machine, however the water temperature shall not exceed 30 degrees Celsius. When washing, one should use washing solutions certified by the Polish National Institute of Hygiene, for use with delicate products, in a quantity specified on the packaging.
- It is permissible to clean the foam - sponge inserts with a damp cloth and a mild detergent. After this procedure is carried out, thoroughly dry the insert in room temperature.

NOTE! BEFORE YOU USE THE CARETTA BUGGY CT STROLLER AGAIN, THE UPHOLSTERY SHALL BE DRY.

- You should systematically take care of the frame, remove the dirt and mud from the moving parts.
- Please, do not use strong (corrosive) detergents and their derivatives.
- One shall avoid prolonged sunlight exposure. Before you get child seated, please check the seat temperature.

NOTE! CARETTA BUGGY CT STROLLER SHALL UNDERGO MAINTENANCE AT LEAST ANNUALLY. MAINTENANCE WORKS SHOULD BE CARRIED OUT BY A QUALIFIED MAINTENANCE TECHNICIAN. WHEN YOU CARRY OUT THE MAINTENANCE PROCEDURES, THE SAFETY OF THE BUGGY SHOULD BE REVIEWED - MOVING ELEMENTS, CLASPS AND ADJUSTMENT MECHANISMS SHALL BE INSPECTED. PERIODIC MAINTENANCE ALLOWS FOR LONG TERM OPERATION, WITHOUT ANY MAJOR PROBLEMS.

18. Warranty/Service

Should you notice any faults or defects, you should stop using the buggy immediately and contact your dealer or manufacturer. Defective unit must be protected against enlarging the area of damage. Never attempt to disassemble or repair the product. Do not replace original parts with the ones coming from a source other than the manufacturer recommends.

If the user decides not to continue using the product it is bound to its disposal in accordance with the applicable environmental regulations.

The economic lifetime of the product is five years.

The manufacturer provides post – warranty service. Contact details:

LIW Care Technology Sp. z o.o., ul. Golfowa 7, 94-406 Łódź, Poland.

biuro@liwcare.pl

Current contact details are available on: www.liwcare.pl

Warranty terms are specified in the warranty card, which is an integral part of this statement. The warranty card is available on the last page of this document.

19. Identification plate

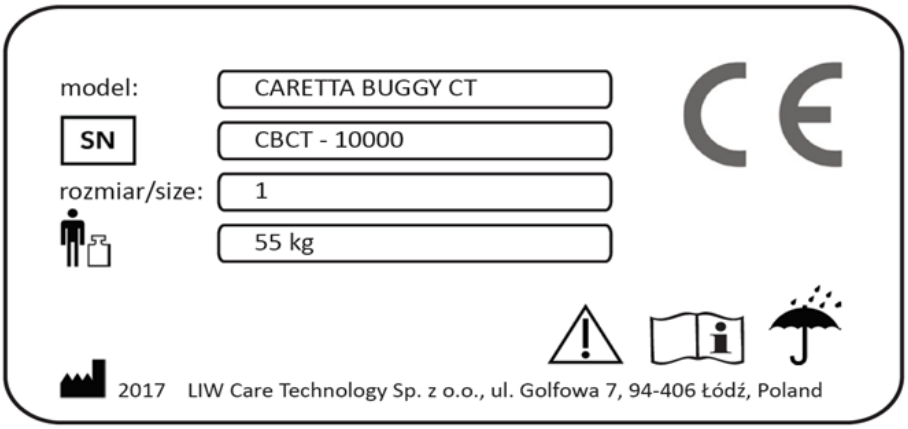

20. Symbols meaning

Manufacturer’s name and date of manufacture

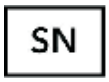

Serial Number

User’s permissible weight

Note! Follow product instructions

Avoid contact with water

Unlocking direction

Movement direction

Mark of conformity in accordance with EU Directive 93/42 EEC Annex. VII, concerning medical devices

21. Compliance with the safety requirements for medical devices

Caretta Buggy CT meets the essential requirements of the MDD 93/42 EEC for medical devices.

Caretta Buggy CT, in accordance with Annex IX of the MDD 93/42 EEC is non-invasive non-active I class medical device according to rule 1.

The Declaration of Conformity for this product can be found in manufacturer's Sales Department.

WARRANTY CARD

Warranty terms:

1. Manufacturer of medical device - LIW Care Technology Sp. z o.o. (ul. Golfowa 7, 94-406 Łódź, Poland) ensures that the company sells an operative device, free from construction, installation, material defects, etc., and that the device will remain free from such defects during the warranty period. This warranty does not cover usefulness of the product for the Buyer purposes.
2. LIW Care Technology Sp. z o. o. (the manufacturer) grants a two-year warranty for the equipment, starting from the initial purchase date.
3. The only proof of warranty is this warranty card, issued by the Seller to the Buyer. To transfer warranty entitlements, you need to transfer the possession of this warranty card.
4. In case of finding any faults or defects during the warranty period - the manufacturer will remedy the defect at his own cost. If parts are replaced, the removed part shall become the property of the LIW Care Technology Sp. z o. o. and shall not be returned to the warranty user.
5. Under the warranty, the user is obliged to report physical product defect during the warranty period via a form on our website: www.liwcare.pl, following prior logging to the "customer zone" by post LIW Care Technology Sp. z o. o. or by phone: +48 42 212-35-18.
6. Under the warranty, the user is obliged to deliver the equipment with warranty card and along with the original document of purchase (VAT invoice or receipt) at the expense of the manufacturer to his seat. when there is no receipt, the initial purchase date (the start of the warranty period) shall be the date of delivery.
7. The device sent to the service, should go with the clean upholstery, or, in the event of impossibility of washing it, the upholstery should be taken off.
   In the event of receiving dirty unit to the service, producer has the right to refuse carry out repairs.
8. This warranty does not cover:
   - waste elements and destroyed or damaged parts due to improper use (in particular, but not exclusively due to improper instructions issued or under unfavorable conditions), or improper storage of the product,
   - damage caused by any alterations or additions to the device made by the user or a third parties,
   - damage caused by improper cleaning or maintenance of the product made by the user or a third party,
   - damage caused by normal wear and tear or normal aging of the product,
   - damage caused by user's lack of negligence (particularly, but not exclusively, in maintenance and cleaning of the product),
   - damage caused by force majeure,
   - damage caused by external events (pollutions, mechanical and water damage).
9. The warranty does not include does not include regulation and adjustment during the warranty period, because they do not constitute a product defect.
10. In order to qualify for the above warranty, you need to deliver the product which is securely enclosed in packaging to the manufacturer. To do that, use the original packaging. If the user does not deliver the product in the original packaging, his replacement packaging must satisfy the following requirements: solid box with intact walls, separate protection for each component, cushioning material, strong tape used for wrapping, as well as sender address or receiver (LIW Care Technology Sp. z o. o). address.
11. LIW Care Technology Sp. z o. o. shall not be held liable for product damage caused by insufficient packaging.
12. Warranty Repair or replacement will be made as far as possible within 30 days from the proper delivery of the product by the warranty user to LIW Care Technology Sp. z o. o.
13. After warranty repair, the product will be delivered at the expense of LIW Care Technology Sp. z o. o., to the supplied address. In the event when a correctly addressed package is not collected, the warranty user is obliged to shall bear all costs related to the product transport and its storage.
14. Quality warranty granted by LIW Care Technology Sp. z o. o. does not affect any legal rights of the Buyer.

Thank you for choosing our product. We wish you success in therapy with our equipment.

NOTE!
KEEP THE WARRANTY CARD IN A SAFE PLACE

LIW Care Technology Sp. z o. o. will require providing this document before accepting the warranty repair.

Product name/Type ……..Serial number……

Sold-by date…… Stamp and signature of the Seller: ……

No.	Date of repair request	Procedures	Repair completion date	Stamp and signature of the technician
1				
2				
3				
4				